1-877-903-7246

TRENCHDRAIN SUPPLY

www.trenchdrainsupply.com

Number	Series
6953A-Cover	**6950 Series** Trench Drain Solid Cover Heavy Duty

6953 Trench Cover

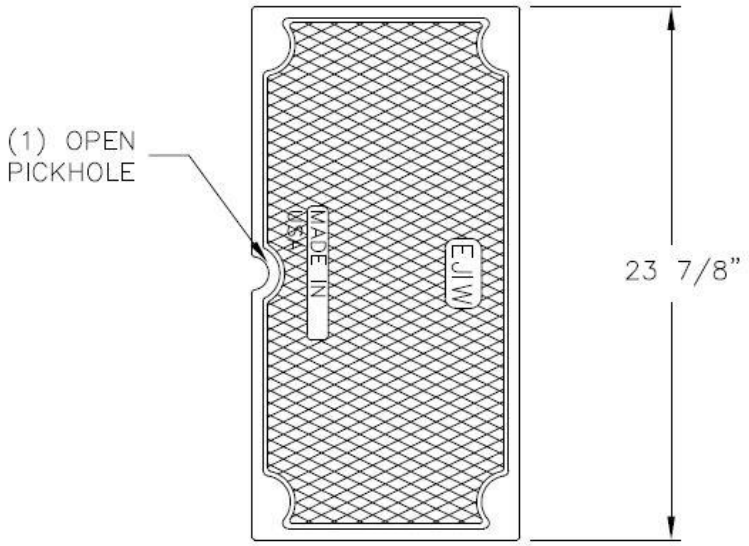

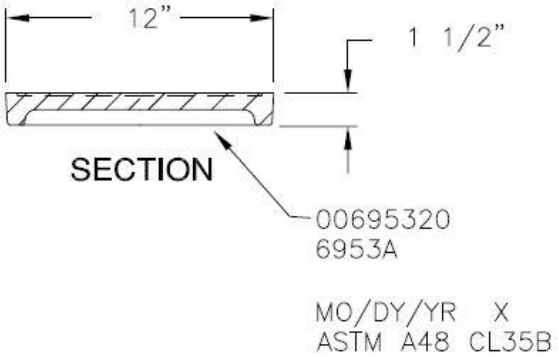

Manufacturer

Specification

Grate Material : Gray Iron (CL35)
Design Load: Heavy Duty
Coating: Undipped
Open Area: NA
Certification: ASTM A48
Country of Origin: USA

DISCLAIMER - The customer and the customerôs architects, engineers, consultants, and other professionals are completely responsible for the selection installation and maintenance of any product purchased from Trench Drain Supply and/or its manufacturers. TRENCH DRAIN SUPPLY MAKES NO WARRANTY, EXPRESS OR IMPLIED, AS TO THE SUITABILITY, DESIGN, MERCHANTIBILITY, OR FITNESS OF THE PRODUCT FOR CUSTOMERS APPLICATION. The drawing and information provided remain the property and copyright of the manufacturer listed. The manufacturer reserves the right to modify specification without notice.